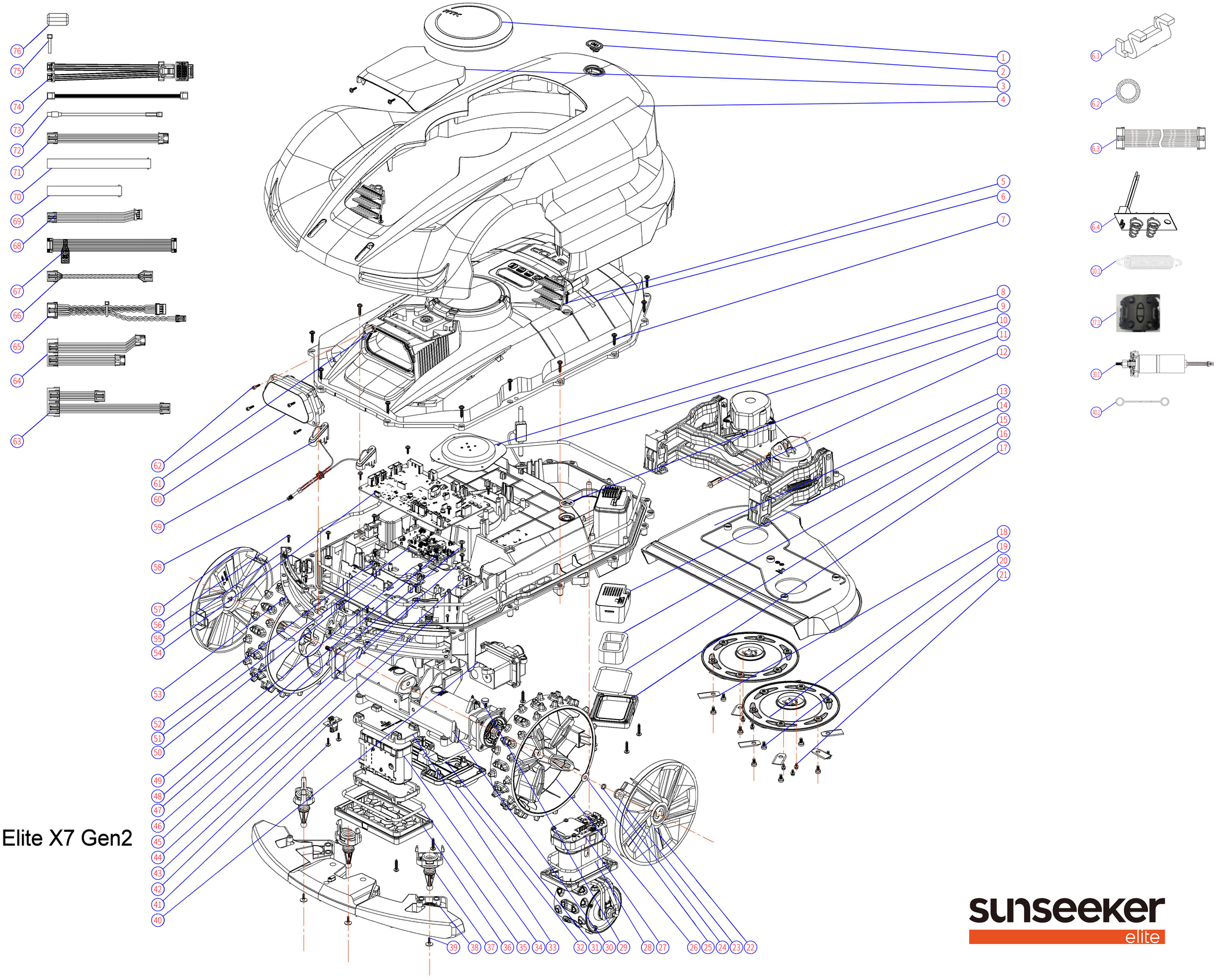

Model: Sunseeker Elite X7 Gen2

Art no: 90070275

Year: 2026

sunseeker elite

POS	QTY	PARTNUMBER	BESKRIVELSE	DESCRIPTION
1	1	456536	RTK DÆKSEL	RTK DECORATIVE COVER
2	1	454418	REGNSENSOR	RAIN SENSOR
3	1	456537	KAMERA DÆKSEL	CAMERA DECORATIVE COVER
4	1	456538	DÆKSEL	DECORATIVE COVER ASSEMBLY
5	1	90070305	HJULBØRSTE (2 STK./SÆT)	
6	1	456539	ØVRE DÆKSEL	TOP COVER MODULE
7	13	456411	SKRUE (5 STK)	SCREW (5 PCS)
8	1	456521	MOBIL BASESTATION INTEGRERET ANTENNE FM25	MOBILE BASE STATION INTEGRATED
9	1	454394	TÆTNINGSRING	MAIN CHAMBER SEAL RING
10	1	456540	SKÆRESYSTEM KOMPONENT	CUTTING SYSTEM COMPONENT
11	2	454396	O-RING	O RING
12	1	448979	AKSEL	ROTATION AXIS
13	1	454399	KNIVHOLDER SKJOLD	CUTTING DISC SHIELD
14	1	90070256	4G MODUL (2026)	
15	1	456522	GPS STØTTESKUM	GPS SUPPORT FOAM
16	1	456434	GPS TÆTNINGSRING	GPS SEALING RING
17	1	456432	DÆKSEL TIL GPS-MODUL	GPS MODULE COVER
18	2	454361	KNIVE (6 STK)	BLADE (6 PCS)
19	2	90070321	KNIVDISK MED 6 KNIVE	
20	2	448982	KNIVSKRUE (6 STK.)	SCREW FOR BLADE (6 PCS.)
21	3	456423	SKRUE	SCREW
22	1	454400	HJULKAPSEL VENSTRE FRONT	LEFT FRONT WHEEL COVER
23	2	453648	LÅSEMØTRIK	M6-NON-METALLIC INSERT LOC NU
24	2	448954	SKIVE ELASTISK	ELASTIC WASHER 6
25	2	454366	SKIVE	FLAT PAD ?6.4X?30X2
26	2	454401	HJUL X7	DRIVING WHEEL
27	1	456528	BAGHJULSMODUL	REAR WHEEL MODULE
28	1	456530	TÆTNINGSRING TIL BAGHJULSDRIVNING	REAR DRIVE WHEEL SEALING RING
29	2	454348	GUMMIPUDE	RUBBER PAD
31	1	456474	TÆTNINGSRING TIL HOVEDKAMMER 3	MAIN CHAMBER SEALING RING 3
32	1	456475	KØLEPROFIL	HEAT SINK
33	2	454403	BESLAG BATTERI	BATTERY PACK BRACKETS FOR 10AH
34	1	469106	BATTERI TIL X7	BATTERY PACK
35	1	454404	BATTERI PAKNINGSRING	BATTERY PACK COVER SEALING
36	1	454405	COVER BATTERI	BATTERY PACK COVER
37	3	454406	SVINGARM	SWING ROD
38	1	456543	ANTI-KOLLISIONS	ANTI-COLLISION ASSEMBLY
39	1	456544	SKRUE (5 STK.)	SCREW (5 PCS.)
40	1	454398	HØJDEJUSTERING	HEIGHT-ADJUSTING MODULE
41	5	448958	SKRUE (5 STK)	SCREW (SUS304) (5 PCS)
42	1	448957	USB PORT	USB BOARD

POS	QTY	PARTNUMBER	BESKRIVELSE	DESCRIPTION
43	2	448996	SENSOR	COLLISION SENSOR PCBA
44	2	454347	LØFTESENSOR	LIFT SENSOR PLATE
45	2	465107	STOPKNAP	
46	2	448997	SENSORPLADE	SENSOR PRESSING PLATE
47	4	454858	PAKNING	SCREW GASKET
48	1	454336	SKRUE (5 STK)	SCREW (5 PCS)
49	1	454331	TERMISK PLADE	THERMAL CONDUCTIVE PHASE CHANG
50	1	454335	SENSOR PANEL	GEOMAGNETIC SENSOR PANEL
51	1	456417	KERNEALGORITME PRINTKORT	CORE ALGORITHM BOAR
52	2	454411	KLEMME	GEOMAGNETIC PLATE CLAMP
53	1	456546	CHASSIS	CHASSIS
54	1	456547	HOVEDKORT	MAIN BOARD
55	1	454413	LED LYS	LED LAMP
56	2	454333	SKRUE (5 STK)	SCREW (5 PCS)
57	1	454414	HJULKAPSEL HØJRE FRONT	RIGHT FRONT WHEEL COVER
58	1	456548	LCB30-F HUS	LCB30-F HOUSING ASSEMBLY
59	1	456549	OPLADNINGSKABEL MODUL	CHARGING WIRE HARNESS MODULE
60	1	456517	KAMERAMODUL	CAMERA MODULE
61	1	456516	KAMERATÆTNINGSRING	CAMERA SEALING RING
62	4	456550	CYLINDRISK SELVSKÆRENDE SKRUE	HEX SOCKET CYLINDRICAL HEAD SE
63	1	454376	LØFTESENSOR LEDNINGSNET	MAIN BOARD CONNECTION LIFT SEN
64	1	454375	KOLLISION LEDNINGSNET	COLLISION SENSOR WIRING HARNES
65	1	456551	POSITIONERINGSKORT FORBINDELSESKABEL	POSITIONING BOARD CONNECTION H
66	1	456532	LEDNINGSNET	WIRE HARNESSES
67	1	454369	BUNDKORT LEDNINGSNET	MAINBOARD-ALGORITHM BOARD COMM
68	1	454370	STRØM LEDNINGSNET	MAINBOARD-ALGORITHM BOARD POWE
69	1	456552	LEDNINGSNET	WIRE HARNESSES
70	1	456531	LEDNINGSNET	WIRE HARNESSES
71	1	454372	GEOMAGNETISK LEDNINGSNET	GEOMAGNETIC PLATE CONNECTION H
72	1	456439	4G MODUL KOMMUNIKATIONSLEDNINGSNET	4G MODULE COMMUNICATION HARNES
73	1	456534	LEDNINGSNET	WIRE HARNESSES
74	1	456553	LEDNINGSNET	WIRE HARNESSE
75	6	448855	STRIPS (4 STK)	CABLE TIE (4 PCS.)
76	5	454417	MAGNET	MAGNETIC RING
6,1	2	448997	SENSORPLADE	SENSOR PRESSING PLATE
6,2	2	456421	VANDTÆT ÅNDBAR MEMBRAN	WATERPRO OF BREATHABLE MEMBRA
6,3	1	449001	DISPLAY KABEL	DISPLAY BOARD CONNECTION WIRE

POS	QTY	PARTNUMBER	BESKRIVELSE	DESCRIPTION
6,4	1	454392	PRINTKORT REGNSENSOR	RAIN SENSOR BOARD
6,5	1	456461	DISPLAYKORT PCBA	DISPLAY BOARD PCBA
10,1	1	456541	TRÆKFJEDER	TENSION SPRING
27,1	1	456542	GUMMIBELÆGNING AF BAGHJUL	RUBBER COATING OF REAR WHEEL
30,1	2	454425	HJULMOTOR (ENKELT)	WHEEL DRIVE MOTOR (SINGLE)
40,1	1	456545	FORHØJNINGSREM	HEIGHTENING SLING

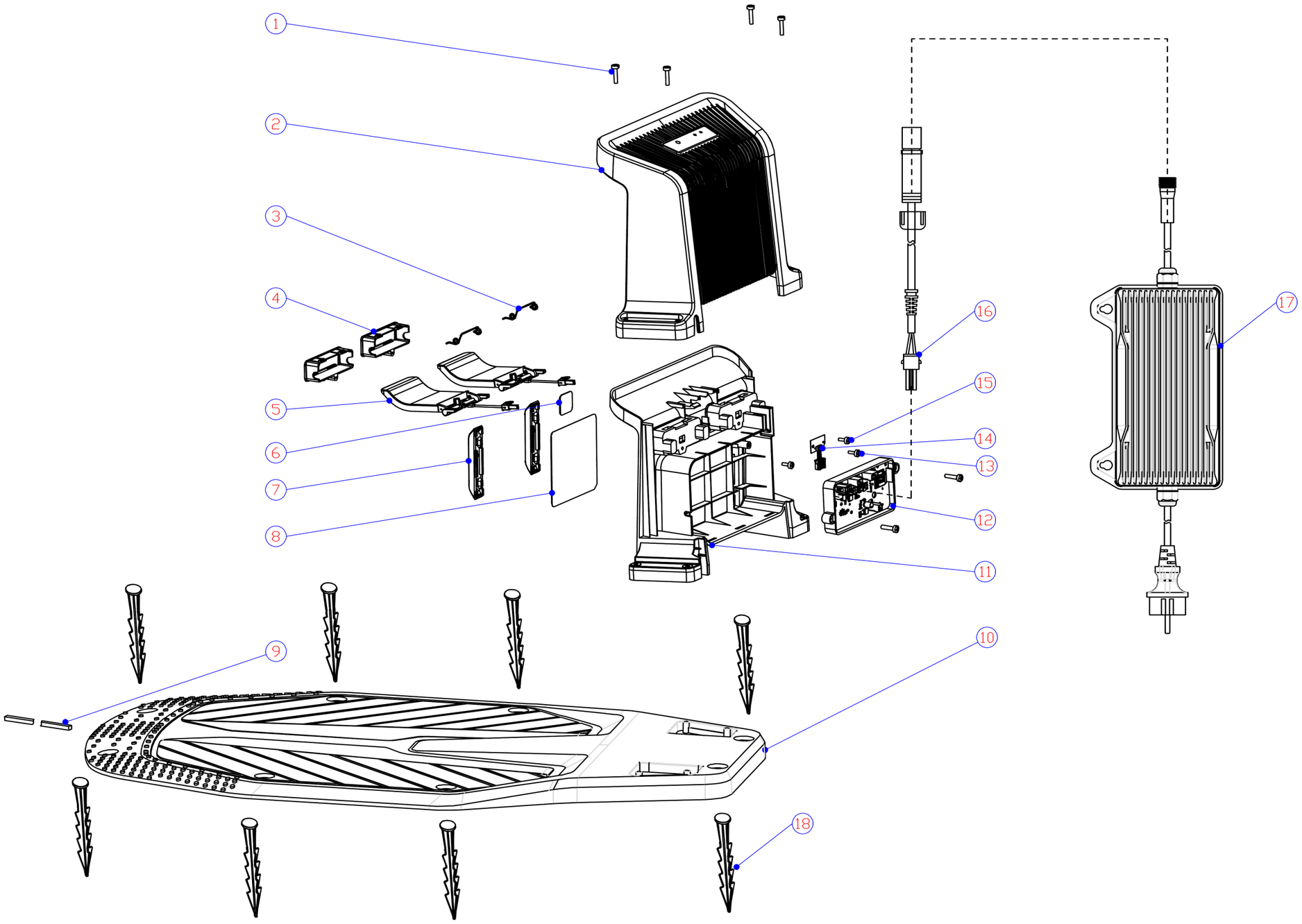

sunseeker
elite

POS	QTY	PARTNUMBER	BESKRIVELSE	DESCRIPTION
1	2	456411	SKRUE (5 STK)	SCREW (5 PCS)
2	1	454879	COVER	CHARGING STATION REAR COVER
3	2	454880	FJEDER	TWINS TORSIONAL SPRING
4	2	454881	BESLAG	MOUNTING BRACKET
5	2	454882	KONTAKTPLADE OPLADNING	CHARGING PILE CONTACT PLATE AS
6	1	448967	LYSPANEL	INDICATOR LIGHT PANEL
7	1	454883	STØDDÆMPER (2 STK)	CUSHION (2 PCS)
8	1	454420	QR KODE	CHARGING STATION QR CODE
11	1	456444	SÆDE TIL LADESTATION	CHARGING STATION SEAT
12	1	456445	OPLADNINGSPRINT SAMLING	CHARGING BOARD ASSEMBLY
13	1	454333	SKRUE (5 STK)	SCREW (5 PCS)
14	2	448958	SKRUE (5 STK)	SCREW (SUS304) (5 PCS)
16	1	456446	STRØMSTIK	POWER CORD PLUG
17	1	454423	STRØMFORSYNING	CHARGING STATION POWER SUPPLY
18	1	454387	PLASTPLØKKER (8 STK.) TIL LADESTATION	CHARGING STATION NAILS (8 PCS)